microsonic
Ultrasonic Sensors

A comprehensive solution for industrial applications

ULTRASONIC SENSORS

Extract from our online catalogue:

wms ultrasonic sensors

Current to: 2015-01-12

microsonic gmbh, hauert 16, d-44227 dortmund, telephone: +49 231 975151-0, fax: +49 231 975151-51, e-mail: info@microsonic.de

The wms sensors are designed for use in microprocessor controllers with signal evaluation performed by the customer.

Highlights

- **Trigger input :::** *for control of the ultrasonic transmitter*
- **Echo output :::** *for customer-provided evaluation in the controller*

Basics

- **1 echo output :::** *with a load up to 10 mA*
- **5 detection ranges with a measurement range of 30 mm to 8 m**
- **0.36 mm resolution**
- **9–30 V operating voltage**

Description

The wms sensors

require connection to the customer's own control and signal evaluation equipment.

wms - the inexpensive alternative

to a self-contained sensor when the sensor must be controlled by the customer's system. A microprocessor control is normally required for this.

The "transmitter" signal input

briefly has to be set to UB by the control unit via an open-collector circuit. As a result, an the wms sensor emits a sound pulse for the time of this signal.

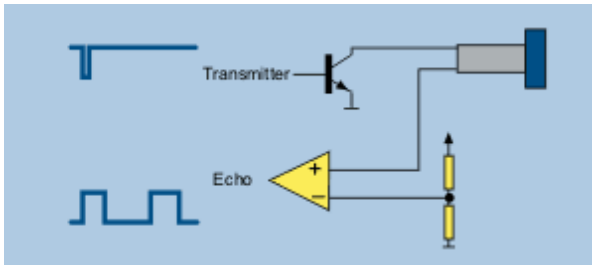

Triggering a wms sensor from the customer's control system

The "echo" signal output

subsequently transmits all echo signals received depending on their duration as 1 bit values (echo yes/no). This takes between 8 and 65 ms depending on the type of sensor. The positive-switched (pnp) output can be loaded with 10 mA. The computation of the distance and subsequent processing is carried out in the customer's control system.

Our project engineers

will be happy to assist you in integrating a wms sensor into your control system.

wms-35/RT

scale drawing	detection zone
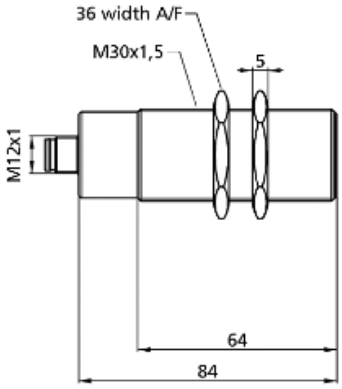	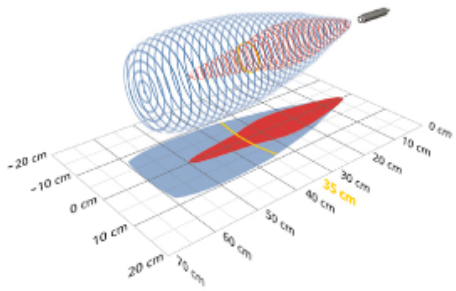

echo output	600 mm
operating range	65 - 350 mm
design	cylindrical M30
operating mode	sensor for evaluators
ultrasonic -specific	
means of measurement	echo propagation time measurement
transducer frequency	400 kHz
blind zone	65 mm
operating range	350 mm
maximum range	600 mm
angle of beam spread	please see graphics detection zone
reproducibility	± 0.15 %
accuracy	temperature drift 0.17 %/K
electrical data	
operating voltage U_B	9 - 30 V d.c., reverse polarity protection
voltage ripple	± 10 %
no-load current consumption	≤ 30 mA
type of connection	4-pin M12 initiator plug

wms-35/RT

outputs	
output 1	signal output echo pnp: I_{max} = 10 mA (signal output echo)
inputs	
input 1	signal input - transmitter
description	controlled by open collector (npn), $I_C \geq 3$ mA, $U_{CE} \geq 30$ V
recommended measuring cycle time	12 ms
recommended transmitted pulse length	80 µs
housing	
material	brass sleeve, nickel-plated, plastic parts, PBT
ultrasonic transducer	polyurethane foam, epoxy resin with glass contents
class of protection to EN 60529	IP 65
operating temperature	-25°C to +70°C
storage temperature	-40°C to +85°C
weight	140 g
further versions	stainless steel high chemical resistance cable connection (on request)
technical features/characteristics	
controls	no
scope for settings	no
synchronization	yes
multiplex	yes
indicators	no
documentation (download)	
pin assignment	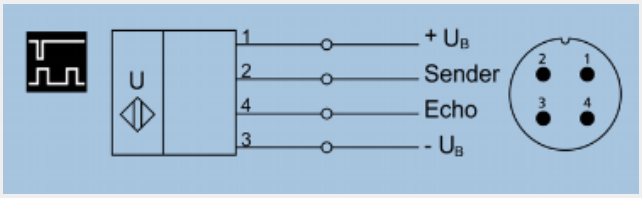

wms-130/RT

scale drawing	detection zone
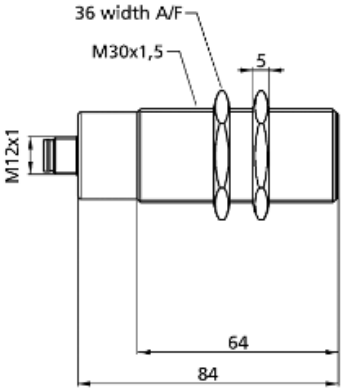	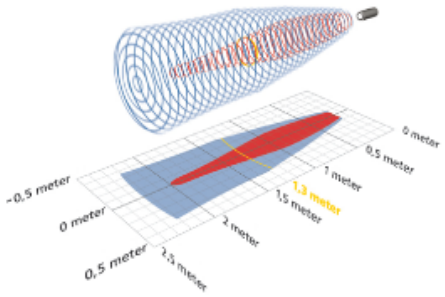

echo output	2,000 mm
operating range	200 - 2.000 mm
design	cylindrical M30
operating mode	sensor for evaluators
ultrasonic -specific	
means of measurement	echo propagation time measurement
transducer frequency	200 kHz
blind zone	200 mm
operating range	1,300 mm
maximum range	2,000 mm
angle of beam spread	please see graphics detection zone
reproducibility	± 0.15 %
accuracy	temperature drift 0.17 %/K
electrical data	
operating voltage U_B	9 - 30 V d.c., reverse polarity protection
voltage ripple	± 10 %
no-load current consumption	≤ 30 mA
type of connection	4-pin M12 initiator plug

wms-130/RT

outputs	
output 1	signal output echo pnp: I_{max} = 10 mA (signal output echo)
inputs	
input 1	signal input - transmitter
description	controlled by open collector (npn), $I_C \geq 3$ mA, $U_{CE} \geq 30$ V
recommended measuring cycle time	20 ms
recommended transmitted pulse length	150 µs
housing	
material	brass sleeve, nickel-plated, plastic parts, PBT
ultrasonic transducer	polyurethane foam, epoxy resin with glass contents
class of protection to EN 60529	IP 65
operating temperature	-25°C to +70°C
storage temperature	-40°C to +85°C
weight	140 g
further versions	stainless steel cable connection (on request)
technical features/characteristics	
controls	no
scope for settings	no
synchronization	yes
multiplex	yes
indicators	no
documentation (download)	
pin assignment	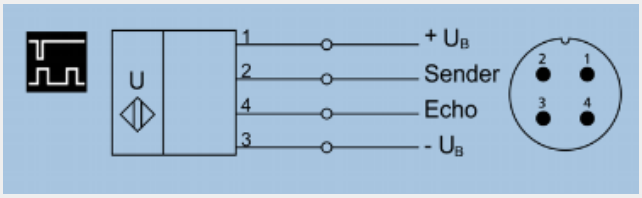

wms-340/RT

scale drawing	detection zone
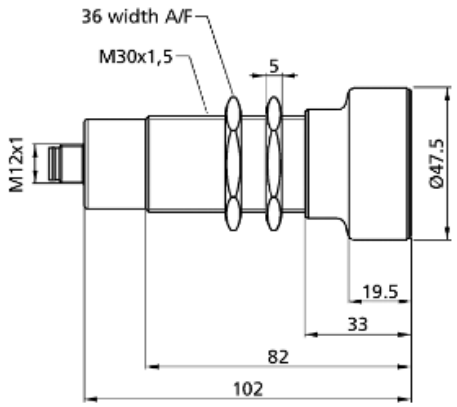	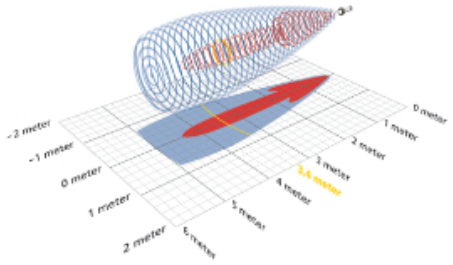

echo output	5,000 mm
operating range	350 - 3,400 mm
design	cylindrical M30
operating mode	sensor for evaluators
ultrasonic -specific	
means of measurement	echo propagation time measurement
transducer frequency	120 kHz
blind zone	350 mm
operating range	3,400 mm
maximum range	5,000 mm
angle of beam spread	please see graphics detection zone
reproducibility	± 0.15 %
accuracy	temperature drift 0.17 %/K
electrical data	
operating voltage U_B	9 - 30 V d.c., reverse polarity protection
voltage ripple	± 10 %
no-load current consumption	≤ 30 mA
type of connection	4-pin M12 initiator plug

wms-340/RT

outputs	
output 1	signal output echo pnp: I_{max} = 10 mA (signal output echo)
inputs	
input 1	signal input - transmitter
description	controlled by open collector (npn), $I_C \geq 3$ mA, $U_{CE} \geq 30$ V
recommended measuring cycle time	40 ms
recommended transmitted pulse length	300 µs
housing	
material	brass sleeve, nickel-plated, plastic parts, PBT
ultrasonic transducer	polyurethane foam, epoxy resin with glass contents
class of protection to EN 60529	IP 65
operating temperature	-25°C to +70°C
storage temperature	-40°C to +85°C
weight	200 g
further versions	stainless steel cable connection (on request)
technical features/characteristics	
controls	no
scope for settings	no
synchronization	yes
multiplex	yes
indicators	no
documentation (download)	
pin assignment	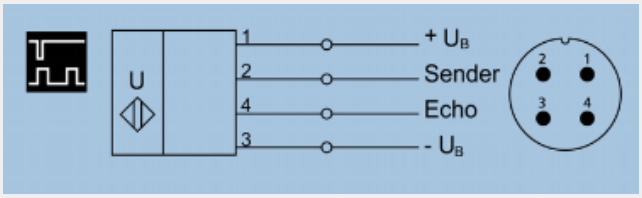

wms-600/RT

scale drawing	detection zone
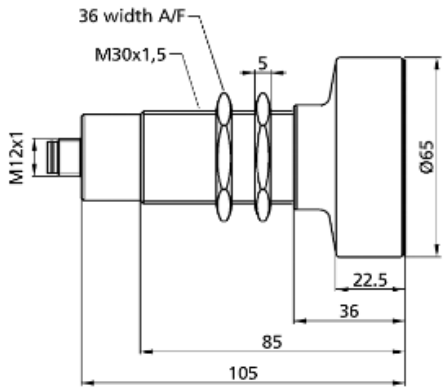	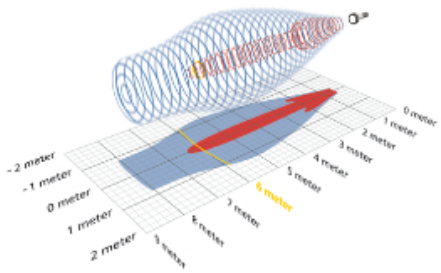

echo output	8,000 mm
operating range	800 - 6,000 mm
design	cylindrical M30
operating mode	sensor for evaluators
ultrasonic -specific	
means of measurement	echo propagation time measurement
transducer frequency	80 kHz
blind zone	800 mm
operating range	6,000 mm
maximum range	8,000 mm
angle of beam spread	please see graphics detection zone
reproducibility	± 0.15 %
accuracy	temperature drift 0.17 %/K
electrical data	
operating voltage U_B	9 - 30 V d.c., reverse polarity protection
voltage ripple	± 10 %
no-load current consumption	≤ 30 mA
type of connection	4-pin M12 initiator plug

wms-600/RT

outputs	
output 1	signal output echo pnp: I_{max} = 10 mA (signal output echo)
inputs	
input 1	signal input - transmitter
description	controlled by open collector (npn), $I_C \geq 3$ mA, $U_{CE} \geq 30$ V
recommended measuring cycle time	65 ms
recommended transmitted pulse length	350 µs
housing	
material	brass sleeve, nickel-plated, plastic parts, PBT
ultrasonic transducer	polyurethane foam, epoxy resin with glass contents
class of protection to EN 60529	IP 65
operating temperature	-25°C to +70°C
storage temperature	-40°C to +85°C
weight	260 g
further versions	stainless steel cable connection (on request)
technical features/characteristics	
controls	no
scope for settings	no
synchronization	yes
multiplex	yes
indicators	no
documentation (download)	
pin assignment	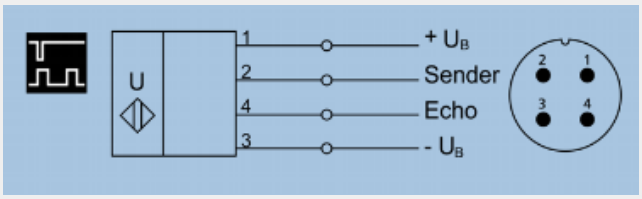

wms-25/RT/HV/M18

scale drawing	detection zone
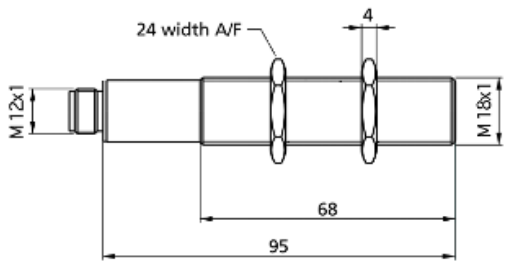	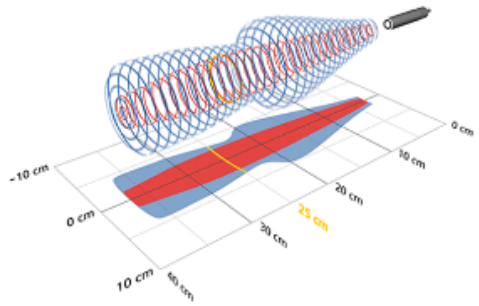

echo output	350 mm
operating range	30 - 250 mm
design	cylindrical M18
operating mode	sensor for evaluators
ultrasonic -specific	
means of measurement	echo propagation time measurement
transducer frequency	320 kHz
blind zone	30 mm
operating range	250 mm
maximum range	350 mm
angle of beam spread	please see graphics detection zone
reproducibility	± 0.15 %
accuracy	temperature drift 0.17 %/K
electrical data	
operating voltage U_B	10 - 30 V d.c., reverse polarity protection
voltage ripple	± 10 %
no-load current consumption	≤ 30 mA
type of connection	4-pin M12 initiator plug

wms-25/RT/HV/M18

outputs	
output 1	signal output echo pnp: I_{max} = 10 mA (signal output echo)
inputs	
input 1	signal input - transmitter
description	controlled by open collector (npn), $I_C \geq 3$ mA, $U_{CE} \geq 30$ V
recommended measuring cycle time	8 ms
recommended transmitted pulse length	25 µs
housing	
material	brass sleeve, nickel-plated, plastic parts, PBT
ultrasonic transducer	polyurethane foam, epoxy resin with glass contents
class of protection to EN 60529	IP 65
operating temperature	-20°C to +70°C
storage temperature	-40°C to +85°C
weight	60 g
further versions	stainless steel
further versions	wms-25/RT/HV/M18E
technical features/characteristics	
temperature compensation	durch Ulraschall-Referenzmessung
controls	no
scope for settings	no
synchronization	yes
multiplex	yes
indicators	no
documentation (download)	
pin assignment